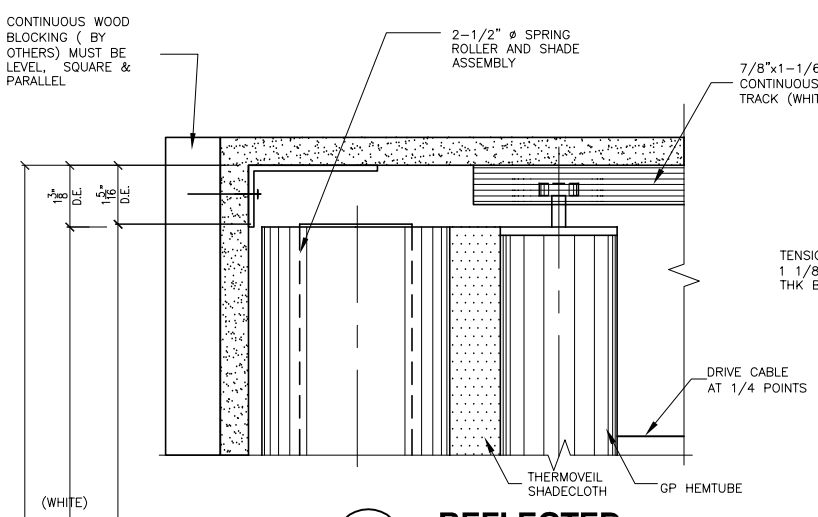

B REFLECTED
SCALE: 1/2 FULL SIZE

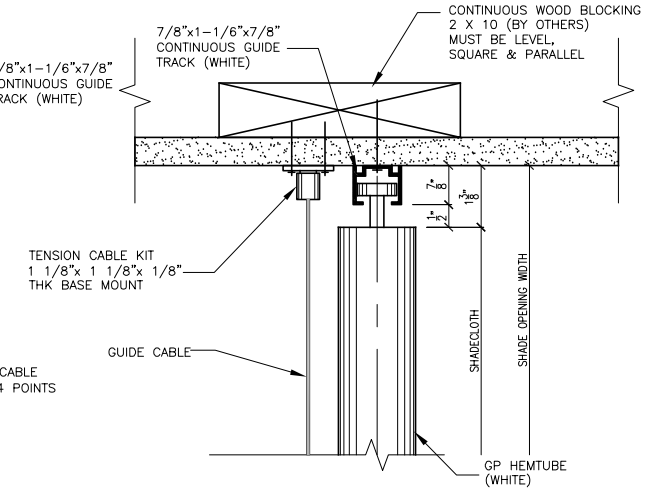

3 TYPICAL SECTION
SCALE: 1/2 FULL SIZE

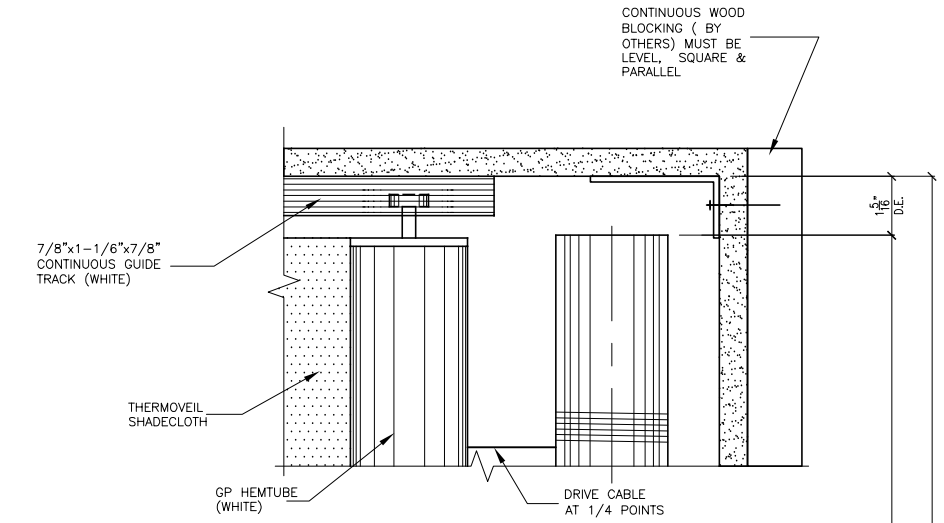

C REFLECTED
SCALE: 1/2 FULL SIZE

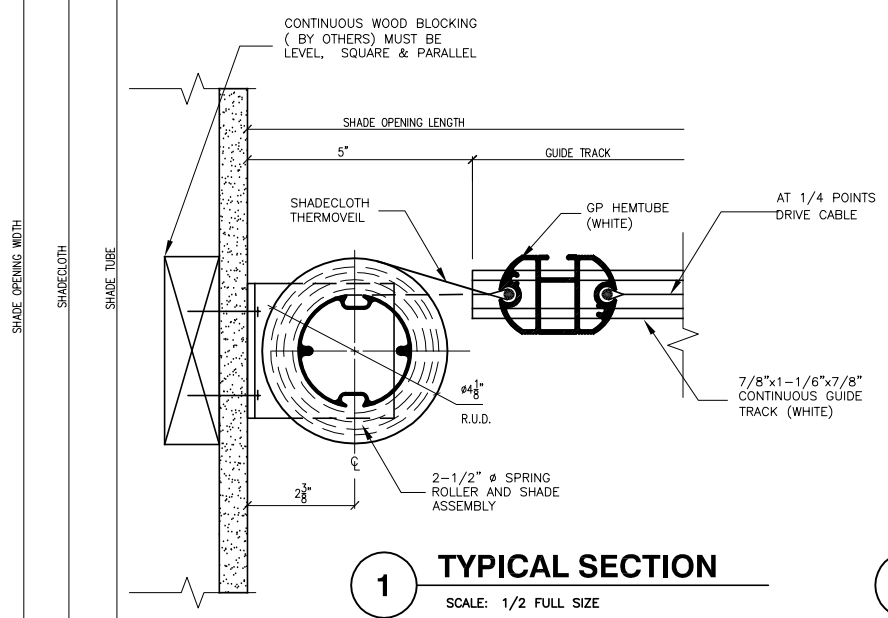

1 TYPICAL SECTION
SCALE: 1/2 FULL SIZE

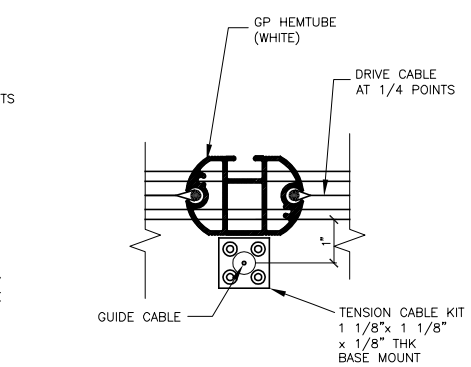

3 TYPICAL SECTION
SCALE: 1/2 FULL SIZE

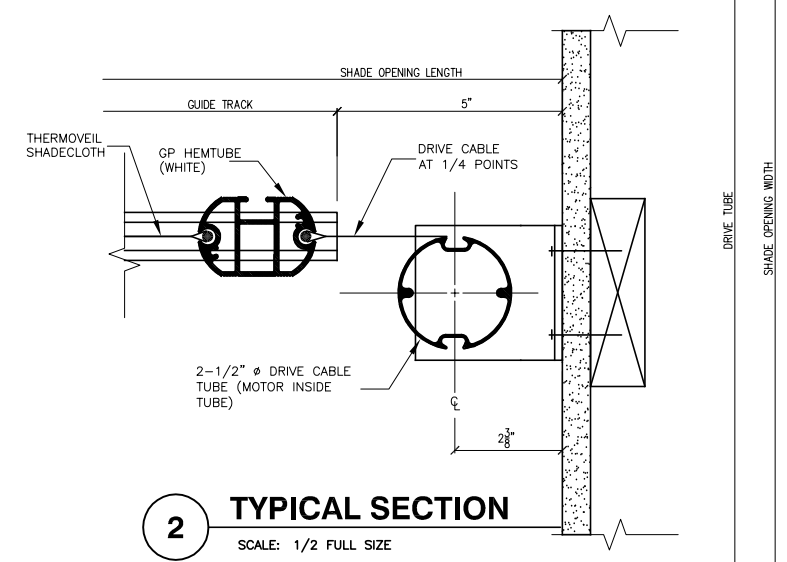

2 TYPICAL SECTION
SCALE: 1/2 FULL SIZE

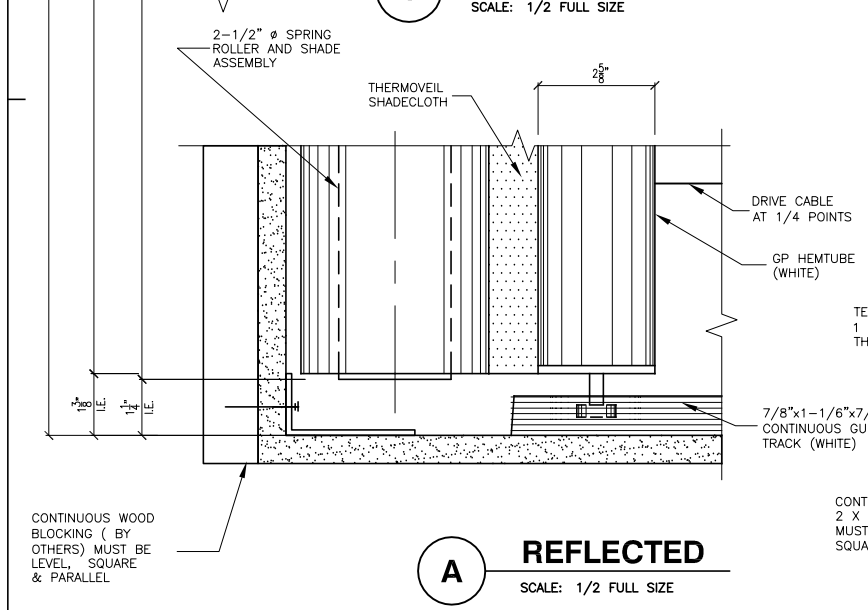

A REFLECTED
SCALE: 1/2 FULL SIZE

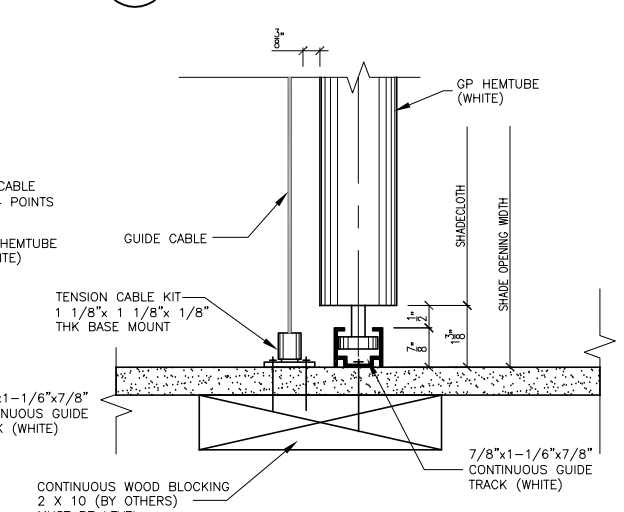

4 TYPICAL SECTION
SCALE: 1/2 FULL SIZE

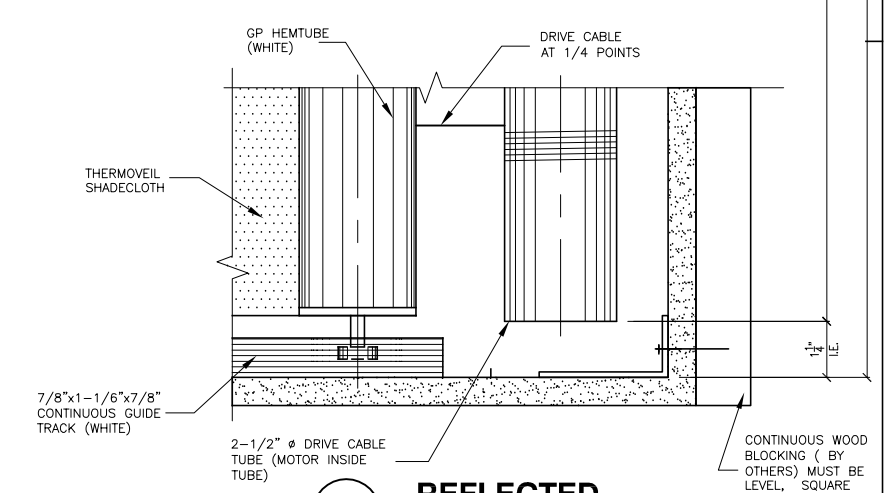

D REFLECTED
SCALE: 1/2 FULL SIZE

NOTES:
1 – SEE SHEET #1

SHOP DRAWING DIMENSIONS

DETAILS:

HARDWARE SIZES	± 1/32" (0.79mm)
ROLL DIAMETER SIZES	± 1/8" (3.18mm)
EDGE CLEARANCE	± 3/16" (4.76mm)

SHADE BANDS:
RollerShade width and height dimensions (W x HT) are approximate, subject to final field dimensions to be scheduled by the Dealer/Contractor and provided to MechoShade Systems for fabrication in accordance with Contract Documents. Shown for PDF Creator details and shade locations only. Final sizes are not included.

FILE NAME: E:\Drawings\M-1624S\DETAILS

NO.	DATE	DESCRIPTION	BY
4			
3			
2			
1			

REVISIONS

MechoShade Systems, Inc.
42-03 35th Street
Long Island City, NY 11101
Tel: 718-729-2020
Fax: 718-729-2941

Copyright © 2001 MechoShade Systems Inc.

JOB	CLAY 25 WEST 14th STREET NEW YORK, NY
TITLE	PROPOSED DETAILS "SKYLIGHT" SHADES
ARCHITECT	STUDIOS ARCHITECTURE
DEALER	LVC INTERIORS
DWG NO.	M-1624S
REV.	
JOB NO.	106259
PROPOSAL NO.	105300
DATE	09/28/01
SCALE	AS NOTED
DWN. BY	M.P.
CKD. BY	Z.D.
SHEET NO.	2 OF 3

D:\Drawings\Details for Architect\SKYLIGHTS\MOTOR-SPRING GP HEMTUBE with guide cable-idler roller FABRIC ON TOP.dwg, 7/12/2006 4:11:35 PM, 36x48, PDF Creator